ROTOR	CFR	CAPACITIES IN CUBIC FEET PER MINUTE						
		5 RPM	10 RPM	15 RPM	20 RPM	25 RPM	30 RPM	35 RPM
6 VANE	.07	.35	.70	1.05	1.40	1.75	2.10	2.45
8 VANE	.065	.325	.650	.925	1.30	1.625	1.95	2.275

DATA FOR NORMAL SERVICE APPLICATIONS			
MOTOR HP	FEEDER RPM	A	B
1/4 TENV	7 THRU 9	26 1/4	10 1/2
1/3 TENV	10 THRU 14	26 1/4	10 1/2
1/2 TEFC	15 THRU 22	28 1/4	11 3/8
3/4 TEFC	23 THRU 44	28 1/4	11 3/8
1 TEFC	45 THRU 50	28 1/4	11 3/8

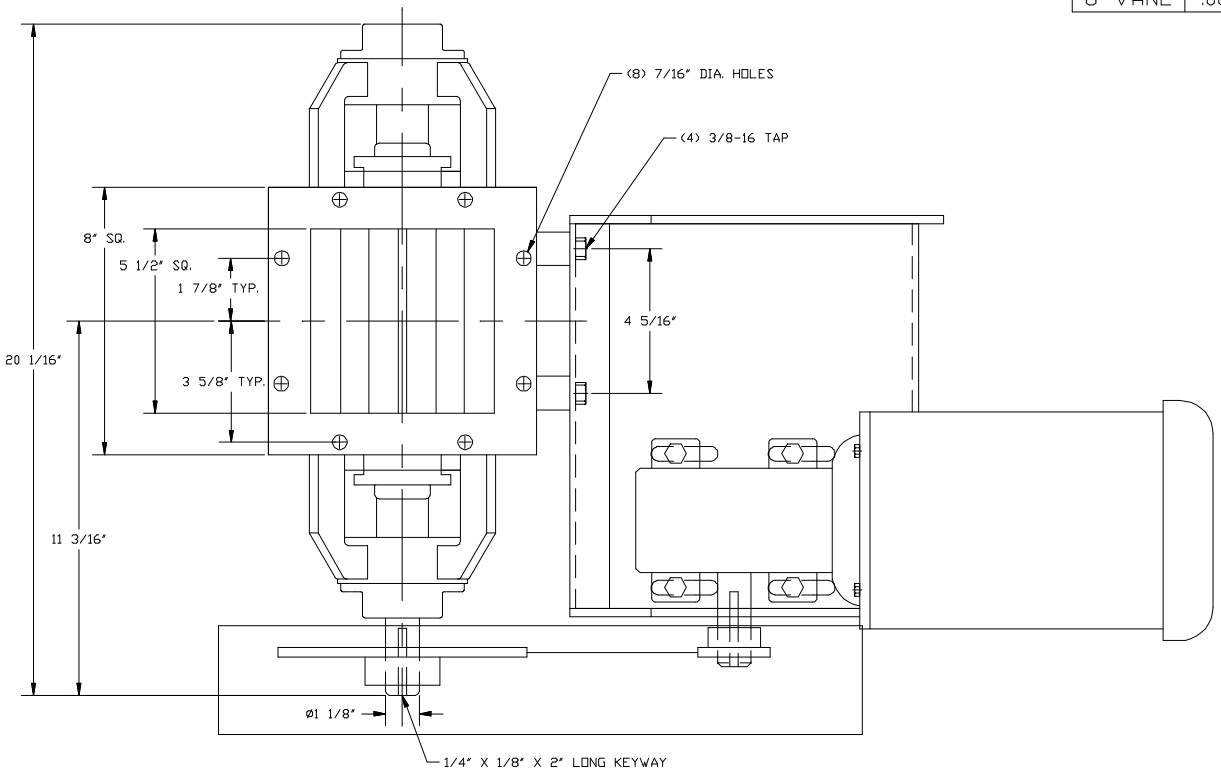

NOTES:
1. ALL MOTORS: 3-60-230/460
2. INFORMATION IS BASED UPON CATALOG DATA. THIS INFORMATION MUST BE USED IN CONJUCTION WITH, AND NOT IN SUBSTITUTION FOR, THE APPLICABLE PRODUCT CATALOG WHICH CONTAINS IMPORTANT PRECAUTIONS AND OTHER PERTINENT INFORMATION.

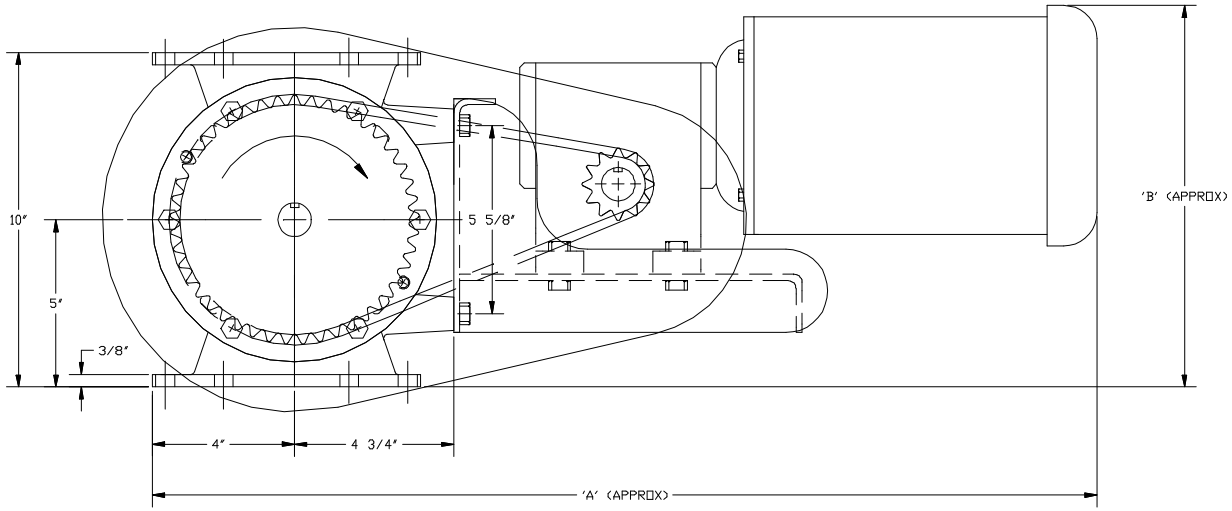

B	10-19-04	UPDATED MODEL NAME		SA
A	8-24-00	4 WAS 4 1/4 DIM		GJL

REVISIONS

WM. W. MEYER & SONS, INC.
SKOKIE, ILLINOIS

6 X 6 HDX SQUARE FLANGE FEEDER ASSEMBLY (Ø1 1/8" SHAFT) WITH TYPICAL RECOMMENDED GEARMOTORS

OUR S.O. NO.		REF. S.O. NO.
DRAWN J.M.	DATE 11-1-95	DRAWING NUMBER
APPROVED	SCALE 3/8"	430B-1228

M:\RAL\06X06HDXSFDR.DWG