ROTOR	CFR	CAPACITIES IN CUBIC FEET PER MINUTE						
		5 RPM	10 RPM	15 RPM	20 RPM	25 RPM	30 RPM	35 RPM
6 VANE	.36	1.80	3.60	5.40	7.20	9.00	10.80	12.60
8 VANE	.34	1.70	3.40	5.10	6.80	8.50	10.20	11.90

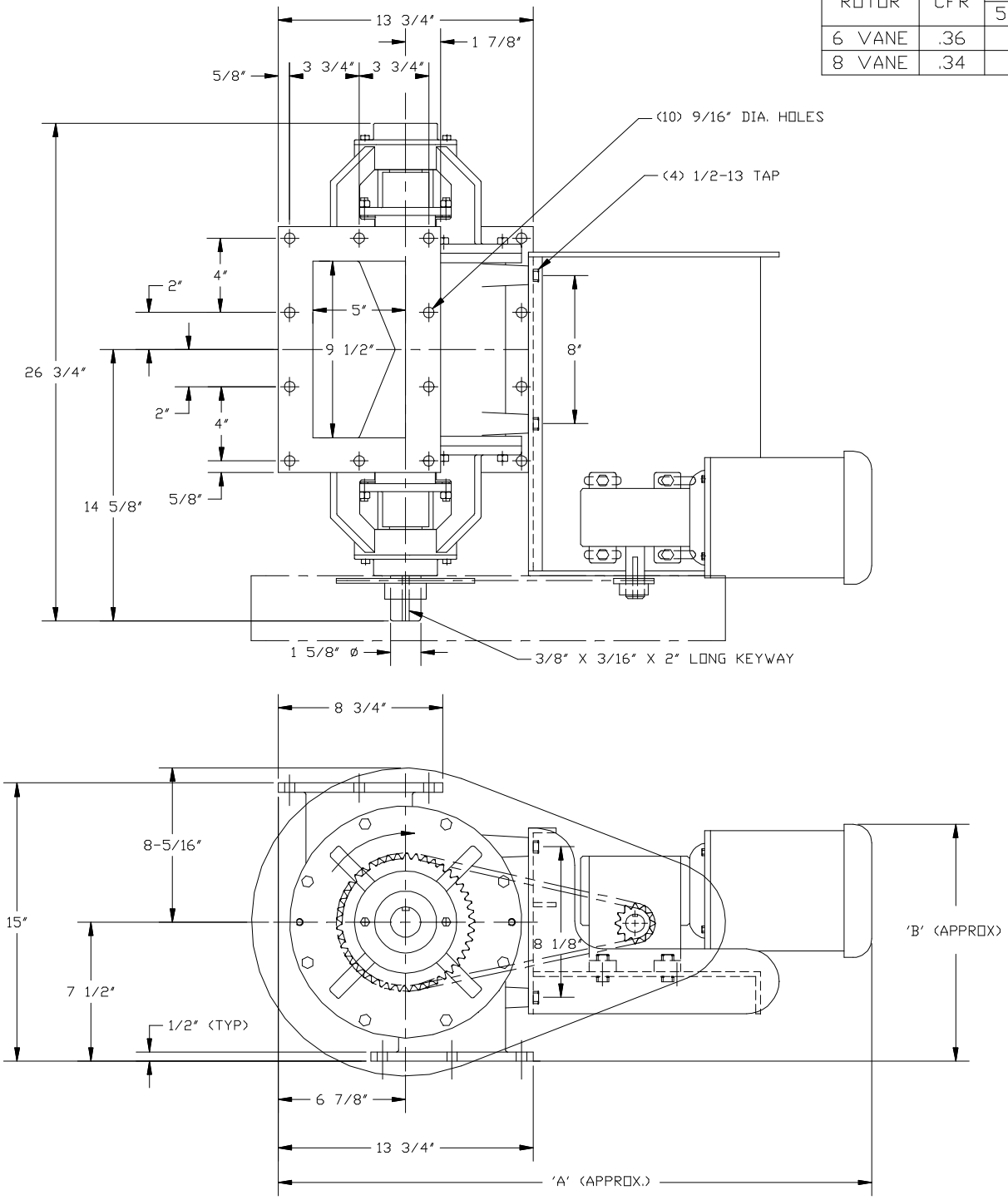

DATA FOR NORMAL SERVICE APPLICATIONS			
MOTOR HP	FEEDER RPM	A	B
1/2 TEFC	7 THRU 9	34	14 1/2
3/4 TEFC	10 THRU 14	34	14 1/2
1 TEFC	15 THRU 22	34	14 1/2
1 1/2 TEFC	23 THRU 35	34 1/2	14 1/2
2 TEFC	40 THRU 47	34 1/2	14 3/4

DATA FOR SEVERE SERVICE APPLICATIONS			
MOTOR HP	FEEDER RPM	A	B
3/4 TEFC	7 THRU 9	34	14 3/4
1 TEFC	10 THRU 14	34	14 3/4
1 1/2 TEFC	15 THRU 22	34 1/2	14 3/4
2 TEFC	23 THRU 35	34 1/2	14 3/4

NOTES:
1. ALL MOTORS: 3-60-230/460
2. INFORMATION IS BASED UPON CATALOG DATA. THIS INFORMATION MUST BE USED IN CONJUNCTION WITH, AND NOT IN SUBSTITUTION FOR, THE APPLICABLE PRODUCT CATALOG WHICH CONTAINS IMPORTANT PRECAUTIONS AND OTHER PERTINENT INFORMATION.

M:\RAL\10X10HDXSEFDR.DWG

C	10-19-04	UPDATED MODEL NAME	SA
B	10-29-96	STD GUARD SHOWN, 8-5/16" DIM ADDED	J.M.
A	5-19-94	REDRAWN ON CAD	TD

REVISIONS

WM. W. MEYER & SONS, INC.
SKOKIE, ILLINOIS

10 X 10 HDX SIDE ENTRY FEEDER ASSEMBLY WITH TYPICAL RECOMMENDED GEARMOTORS

OUR S.O. NO.		REF. S.O. NO.
DRAWN TD	DATE 10-25-88	DRAWING NUMBER
APPROVED	SCALE 1/4"	430D-842